UNIVERSITY LIBRARY. LAW COLLEGE

THE
MADRAS LAW JOURNAL.

VOL.] MARCH, 1926. [L.

BANDHU SUCCESSION UNDER THE MITAKSHARA LAW.

I. The Degree Rule.

The law of bandhu succession continues to be a complex and puzzling subject notwithstanding endeavours by scholars at symmetry and precision. Some of the views and theories of Professor Rajkumar Sarvadhikari have latterly come in for criticism and quite recently their Lordships Spencer and Venkatasubba Rao, JJ. (1) had occasion to consider his views on one of these topics and were obliged to discard them as having no foundation in any ancient text or recognised commentary. Their conclusions agree with the views put forward by Mr. P. R. Ganapathi Aiyar in a series of articles in *The Madras Law Journal* (2).

Their Lordships had to consider the "line" or family theory suggested by Prof. Sarvadhikari in Ch. XIII of his book and they held that there is no warrant for not accepting the rule of seven degrees, in determining the heritable right of Bandhus traced through the father of the propositus. They point out that it could not have been the intention of the Judicial Commitee in *Ramachandra's case* (3) to adopt the five-degree rule uniformly whether the claim is traced through the father or through the mother.

The text of Yajnavalkya (4) "*Panchamat saptamat urdhvam matritah pitritah statha*" and the commentary of Vijnaneswara thereon clearly point to the applicability of the seven-degree rule in one set of cases (5). For, bandhus are bhinna-gotra sapindas or sapindas belonging to a different gotra and sapindaship in the technical sense is declared to extend to the

1. A S No. 334 of 1922; 50 M L J Short Notes, p. 14.
2. 8 M L J (Journal) 53, 99 and 313; 9 M L J pp. 54 and 147.
3. (1914) I L R 42 C 384: 27 M L J 333 (P C).
4. I. 53.
5. Sarvadhikari, 1922 Edn., p. 593.

seventh degree through the father and the fifth through the mother.

To determine the heritable limit of sapindaship, Vijnaneswara's rule is as follows :—"Even as you count seven degrees through the father you shall count seven through the son. In the case of a divergence of the line also the same number of degrees should be counted." Likewise in the case of the maternal relations. The simple rule which is here stated and indicated is that sapindaship extends (1) to the ancestors of the seventh degree through the father of the propositus and of the fifth degree through the mother of the propositus, and (2) to collaterals descended from paternal ancestors up to the seventh degree from where the line diverges, and (3) to collaterals descended from maternal ancestors up to the fifth degree from where the line diverges.

There may be a doubt as to whether sapindaship extends up to the seventh degree among descendants irrespective of descent through son or daughter of the propositus. But Vijnaneswara, by the use of the word *"Tatha,"* after saying "Even as you count seven degrees through the father you shall count seven through the son," indicates that a similar construction should be put on the other half of the Smriti text. Consequently you should count five degrees through the daughter even as you count five degrees through the mother. So, according to Vijnaneswara, "five degrees through the mother" will also indicate "five degrees through the daughter." Once the interpretation of Vijnaneswara that "through the father" will include "through the son" is accepted, we will be justified even if he had not indicated a similar computation for the other half of the Smriti text in adopting such a construction because the Smriti text itself by the use of the word *"Tatha"* has indicated a similarity of computation for both halves of the text, *viz.*, "through the father" and "through the mother". This construction derives support from the dictum of the Judicial Committee in *Ramachandra's case* (5) : "This bond (viz., the bond of sapinda relationship) comes to an end with the fifth degree when the descent is through a female (6)."

In *Babulal's case* (7) the Calcutta High Court laid down that in the case of descendants of the propositus sapindaship extends to the seventh degree under the Mitakshara Law

5. (1914) I L R 42 C 384: 27 M L J 333 (P C).
6. (1914) I L R 42 C 384 at p. 418 (P C). 7. (1894) I L R 22 C 339 at p. 345.

But in the light of what has already been stated, the statement of the rule in *Babulal's case* (7) is rather too wide for it overlooks the distinction between descent through the son and descent through the daughter.

Mitra Misra suggests a rule of exclusion among descendants and his view is shared by Professor Sarvadhikari and has been adopted in the recent edition of Mayne's Hindu Law. They ask, where a descendant of the propositus in the sixth degree is not a heritable sapinda, how can his son in the seventh degree be a heritable sapinda? This argument overlooks the fundamental principle in the Hindu Law of Succession that no heir claims through another and is repugnant to the text which enjoins the counting of seven degrees through the father and through the son. The ancient writers have themselves recognised these apparently anomalous results and have provided for them in what is known as the "Frogleap rule".

Taking first the paternal ancestors, the first question for consideration is what is the number of degrees applicable to the bhinnagotra sapindas of a propositus when the relationship is traced through the father of the propositus. There are some observations in the judgment of the Judicial Committee which seem to suggest that the rule of five degrees is applicable to all cases of bhinnagotra sapindas. As has been pointed out by their Lordships Justices Spencer and Venkatasubba Rao in the recent case, the facts of the case in *Ramachandra* v. *Vinayak* (3) and the observations therein taken as a whole do not warrant the inference that the Judicial Committee intended to lay down a rule of five degrees for all bandhus whether the relationship is traced through the father or through the mother of the propositus. Not only no authoritative commentary has laid down that the five-degree rule is applicable to bandhus on the paternal side, but such a view is also repugnant to the context. Yajnavalkya states the rule of degrees in regard to the marriage of a girl. He first states that the girl should not be of the same gotra and *pravara*. It follows that the girl can never be an immediate descendant of an agnate ascendant or of any agnate collateral, for, the rule as to gotra includes all agnates. The gotra changes only when a female intervenes. Having thus excluded all girls in the agnatic group Yajnavalkya states that she shall be beyond the fifth degree through the mother and seventh through the father. If really the rule of seven degrees is applicable only to agnates, where is the necessity for mention-

3. (1914) I L R 42 C 384 : 27 M L J 333 (P C). 7. (1894) I L R 22 C 339.

ing the seven degrees after having completely excluded all agnatic girls? It stands to reason, therefore, that the rule of seven degrees applies as well to cognates as to agnates. Professor Sarvadhikari's view (8) that the two halves of the text, *viz.*, seven degrees through the father and five degrees through the mother" refer to gotraja sapindas and bhinnagotra sapindas respectively is therefore repugnant to the context.

The dicta of the Judicial Committee in *Ramachandra's case* (3) are as follow:—

"The limitation of five degrees clearly applies and can apply only to bhinnagotra sapindas (9)."

"The sapinda relationship on which the heritable right of collaterals is founded ceases in the case of the bhinnagotra sapinda with the fifth degree from the common ancestor (10)."

In the case before the Judicial Committee the claimant was a collateral bandhu of the propositus, and was in the sixth degree from the common ancestor. Two principal contentions were put forward:—(1) There is no limit to the class of heritable bandhus, the rule of seven and five degrees being applicable only to marriage. (2) All bandhus within seven degrees are entitled to inherit whether the relationship is traced through the father or through the mother. The District Judge held in the case that the claimants *claiming through their mother and being sixth in descent* from the common ancestor were outside the limit of heritable bandhus. Therefore on the facts the rule of seven degrees on the paternal side was not at all required for the decision. For, once the test of mutuality was accepted, the claimant could not be a heritable sapinda. Though the claimant was a sapinda of the propositus, being within seven degrees of the *paternal* grandfather of the propositus, the propositus was not a sapinda of the claimant; for the propositus was the descendant of a common ancestor more than five degrees removed from the claimant, counted through the mother of the claimant. All that was necessary for the decision was the rejection of the contention that you can count seven degrees even when you count through the mother. This contention being rejected, the rule of mutuality excluded the claimant.

Further if the rule of five degrees were applicable all round, whether you count through the father or through the

3. (1914) I L R 42 C 384: 27 M L J 333 (P C).

8. Sarvadhikari, 1922 Edn., p. 596. 9. (1914) I L R 42 C 384 at p. 417 (P C)

10. (1914) I L R 42 C 384 at p. 420 (P C).

mother, there was really no room in that case for the application of the rule of mutuality, for by the rule of five degrees the claimant would be straightaway excluded. The Judicial Committee have not said "judged by either rule, the claimant is out of Court". The inference therefore is that the application of both the rules, the rule as to degrees and that as to mutuality, was required for the exclusion of the claimant. Further, they use the word collaterals in relation to the rule. Does it signify that, in the case of collateral descendants on the paternal side, five degrees is the only rule, but that the 7 degrees may still be applicable in the case of direct ascendants and descendants? It is too much to suppose that their Lordships intended all such consequences and anamolies to flow from the generality of their expressions. Having regard to the facts of the case the dictum must be confined only to maternal collaterals, for the propositus was a maternal collateral beyond the 5th degree from the claimant. Again Sir John Edge in re-stating in his own language the rule laid down in *Ramachandra's case* (3) says that "a bandhu must, in order to be heritable in a female line, fall within the 5th degree from the common male ancestor (11)." Do their Lordships suggest that a claim traced through the mother of the propositus is a claim in the female line and that through the father, a claim in the male line? If so, the inference that by collaterals maternal collaterals were intended in the dictum in question is justified. But if that were not, Sir John Edge's explanation of the dictum is only an explanation *obscurum per obscurius*.

The observations in *Ramachandra's case* (3) must be read as applicable only to the facts of the case and so understood it presents no real difficulty in understanding the rules. Otherwise, it would enunciate a novel theory at variance with the context and with the views of text-writers and commentators.

It may be mentioned that the seven-degree rule has been applied in the case in *Babulal* v. *Nanku Ram* (7) and in *Adit Narayan Singh* v. *Mahabir Prasad* (11) though the case is referred to in *Ramachandra* v. *Vinayak* (3) the seven-degree rule stated therein is not pronounced to be wrong. In some instances, however, the rule of five degrees is assumed to be the only rule applicable for all bhinnagotra sapindas, even by

3. (1914) I L R 42 C 384: 27 M L J 333 (P C).
7. (1894) I L R 22 C 339 at 345: 11. (1920) 40 M L J 270 at p. 276 (P C).

eminent Judges [*vide* 2 Bombay at pp. 436 and 437, per West, J.; and I. L. R. 44 Mad. page 114 at page 119 per Sadasiva Aiyar, J. But *see* 37 Allahabad page 583 *contra*].

Professor Sarvadhikari's rule (12) that a heritable bandhu should be within 5 degrees, with a possible exception in certain cases up to the 6th degree is clearly erroneous as he has not paid any attention to the context where the degree rule is stated. And no reason is adduced for abandoning the 7 degree rule in the case of paternal ancestors which he says he has been repeatedly insisting on (13). Professor Sarvadhikari's rule of five degrees and six degrees have really no place in the Mitakshara scheme of bandhu succession.

That the seven-degree rule applies to all relations on the paternal side of the propositus is also confirmed by the recognition of what are called "frogleap" ancestors.

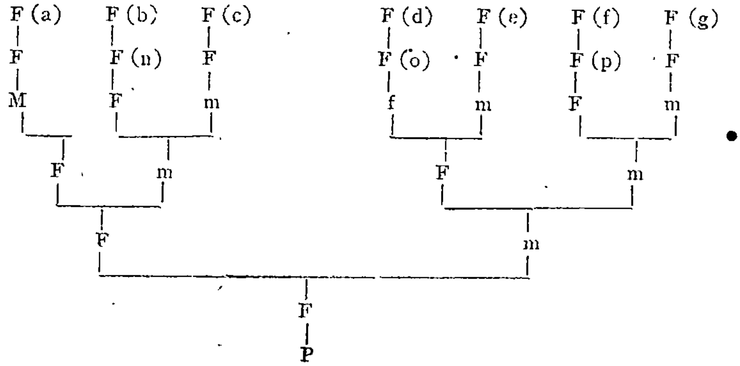

Among those that are marked in the above diagram as N. O, P in the 6th degree and D, E, F, G and A, B, C in the 7th degree, A, C and E and G are known as frogleap ancestors. Their own immediate descendants are not heritable sapindas of P according to the rules of computation already stated, viz., by the rule that through the daughter you shall count only five. Those frogleap ancestors A, C, E and G are not really exceptions to a general rule for they do not stand alone but have other companions in the same and in a nearer degree, viz., N, O, P and B; D, F. The ancient jurists have taken the cases of A, C and E and G to illustrate not an exception but the rule itself and the recognition by them of the heritable right of A, C, E and G and others confirms the conclusion that the 7 degrees rule is applicable to bandhus who are paternal ancestors. And here we have the rationale of the frogleap cases which at first sight appear to be anomalous and

12. Sarvadhikari's Inheritance. 1922 Edn., pp. 498 and 597.

13. Sarvadhikari's Inheritance, 1922 Edn., pp. 593 and 596. R. 2.

puzzling. The rules relating to the heritable Bandhus can now be summarised as follows:—

I. All maternal ancestors beyond the 5th degree from the propositus and their descendants are not sapindas and therefore not heirs.

II. Maternal collaterals beyond the 5th degree from the common ancestor are not sapindas and not heirs.

III. Lineal descendants beyond the 5th degree through the daughter are not sapindas and not heirs.

IV. Lineal descendants through the son within 7 degrees are heirs.

Exception:—Descendants of the 6th and 7th degrees whose immediate ancestor is their mother are not heirs.

V. Paternal ancestors up to 7 degrees are heirs.

Exceptions:—Where an immediate descendant of an ancestor of the 6th or 7th degrees is a female, such ancestor is not an heir. The descendants of such an ancestor are not heirs either.

VI. All collateral descendants of the heritable paternal ancestors of the 6th and 7th degrees are heirs if such descendants are within 7 degrees of the common ancestor.

Exception 1.—Descendants beyond the 5th degree from the ancestor through a daughter of the common ancestor are not heirs.

Exception 2.—Descendants within 5 degrees of a common heritable paternal ancestor of the 6th and 7th degrees are excluded if such descendants have an immediate female ancestor.

VII. All collateral descendants up to the 7th degree from a common paternal ancestor who is within 5 degrees of the propositus are heirs.

Exception 1.—Descendants beyond the 5th degree from the common ancestor through a daughter of the common ancestor are not heirs.

Exception 2.—Descendants beyond the 5th degree from the common ancestor when the immediate ancestor of such descendants are their mothers are not heirs.

N. SIVARAMA KRISHNA AIYAR, M. A., M. L.,
Vakil, High Court.

SUMMARY OF ENGLISH CASES.

COHEN *v.* JONESCO, (1926) 1 K B 119 : 95 L J K B 100.

Money-lender—Harsh and unconscionable bargain—Re-opening of transaction—Powers of Court—Prior judgment by consent—Effect of—If can be re-opened—Moneylenders Act, 1900, *S.* 1.

Even in the case of a harsh and unconscionable bargain as between a money-lender and his debtor, where the transaction between them had been the subject of a judgment of Court between the parties, a Court has no power under S. 1 of the Moneylenders Act of 1900[corresponding to S. 3(*ii*) of the Indian Usurious Loans Act, 1918] to re-open the transaction and direct the taking of accounts on a new basis. The mere fact that the judgment was the result of an agreement between the parties does not affect the position.

THE KING *v.* GOVERNOR OF BRIXTON PRISON, (1926) 1 K B 127.

Insolvency—Removal or secretion of property—Offence—Burden of proof—Bankruptcy Act, 1894, *S.* 154— *Habeas corpus—Summons—Form of.*

Where a bankrupt is charged with an offence under S. 154 of the Bankruptcy Act, 1914 (corresponding to S. 69 (*c*) of the Provincial Insolvency Act V of 1920) for concealing or fraudulently removing any part of his property, the onus does not lie upon him to show that he has not concealed or fraudulently removed any part of his property during the period specified. In the first instance the onus lies on the prosecution to show that the bankrupt has concealed or removed property; and when that has been done the onus is on the bankrupt to show that in concealing or removing the property he had no intention to defraud.

When a *habeas corpus* application is made the better practice is to take out a summons to show cause why an order *nisi* for a writ of *habeas corpus* should not issue.

HUYTON AND ROBY GAS COMPANY *v.* LIVERPOOL CORPORATION, (1926) 1 K B 146.

Damages—Suit for—Corporation carrying on waterworks—Negligent filling up of earth—Fracture of Gas pipes

more than six months later—Suit for damages—If barred—Public Authorities Protection Act, 1893, *S.* 1.

A Municipal Corporation which was laying a water-main underneath a road under certain statutory powers failed to ram in the earth sufficiently when filling in the trench after the main had been laid. As the result of that negligence, the plaintiffs, a gas company, lost a considerable quantity of gas and were put to expense in repairing the pipes, more than six months after the negligent act of the Corporation. In defence to an action for damages, the latter pleaded limitation under S. 1 of the Public Authorities Protection Act, 1894, which provided "The action, prosecution or proceeding shall not lie or be instituted unless it is commenced within six months next after the act, neglect or default complained of, or, in case of a continuance of injury or damage, within six months next after the ceasing thereof." *Held*, the omission to fill up the trenches properly was a continuing breach of duty and if on the day when the damage occurred there was still the neglect and damage resulted therefrom an action instituted within six months would be in time, though the original act of neglect was more than six months before; any other view of the law would deprive a person of his right of action even before he has acquired it.

FREEBORN *v.* LEEMING, (1926) 1 K B 160 : 95 L J K B 114.

Damages—Action for negligence against Public Authority—Personal injuries caused—Limitation—When commences to run—Negligent act or resulting damage—Public Authorities Protection Act, 1893, *S.* 1.

A person who had been knocked down by a motor car and whose left hip joint was dislocated was taken to the work-house infirmary and placed under the care of the medical officer. The latter did not make a proper examination of the patient and hence did not discover the dislocation of the joints. The injured person left the infirmary on 15th October, 1923 and was thereafter treated by other medical men, who discovered the true nature of the injuries, but a complete cure had then become impossible owing to lapse of time. He then sued the medical officer of the work-house infirmary on 25th April, 1924 claiming damages for negligence. *Held* by the Court of Appeal affirming the Division Bench the action was barred by the six months' period of limitation under S. 1 of the Public

Authorities Protection Act, 1893. There was no act or negligence on the part of the defendant within six months of the writ and the mere fact that damage occurred within six months before the writ was immaterial.

REID v. REID, (1926) P. 1.

Divorce—Application by wife for permanent maintenance—Prior deed of separation—Allowance under—Separate enforcement of—Rule as to.

Where after obtaining a decree absolute for divorce against her husband, the wife applies for permanent maintenance, the Court in awarding it can restrain her, so long as the order awarding maintenance was effective, from taking any proceedings under a separation deed providing maintenance executed by the husband prior to the divorce proceedings.

The practice of providing for a wife the amount of a third of the joint income of husband and wife does not proceed upon a rule of law, but is just and convenient.

SHORT v. POOLE CORPORATION, (1926) 1 Ch. 66.

Statutory body—Educational Authority—Employees under—Notice terminating services—Validity of—When open to question—Case if different from that of private employer—Motive—Relevancy of.

The Educational authorities of a certain locality on a report made by their Education Committee decided to dispense with the services of married women teachers in their elementary schools as they considered that married women would have to look after their domestic concerns and could not efficiently discharge both functions together; and also that it was unfair to the large number of unmarried women teachers who were waiting for employment. A notice dispensing with her services was given to one such teacher, who thereupon sued for a declaration that the notice was invalid. *Held,* (by the Court of Appeal reversing the decision of Romer, J.) that the notice was valid and she was not entitled to the declaration claimed.

Per Pollock, M. R.—Where an authority constituted under a statute attempts to exercise its powers corruptly—as under the influence of bribery or *mala fide*—for some improper purpose, its act will be null and void. Where, however, the

body has not done anything which is *ultra vires,* but has exercised its discretion *bona fide* and not arbitrarily or illegally, the Courts cannot interfere, unless the person who challenges the exercise of the powers proves that there is a duty on the Court to interfere.

Per Warrington, L. J.—In the case of a private employer under a contract with an employee, the motives of the employer in giving a notice terminating services would be wholly immaterial if it complied with the terms of the contract. The position of a statutory public body is only different in this, that the act should not have transcended the limits of the authority conferred upon it. It is only if this is proved to have been done that a Court has jurisdiction to interfere. The only case in which the Court can interfere with an act of a public body which is, on the face of it, regular and within its powers, is when it is proved to be in fact *ultra vires.*

In re TURTON : WHITTINGTON *v.* TURTON, (1926) 1 Ch. 96.

Will—Construction—Specific devise—Condition precedent—Impossibility of performance due to act of testator—Effect—Realty and personalty—Difference between.

By his will, a testator bequeathed a coal wharf to trustees on trust to carry on the business till his two named nephews attained the age of 25 and thereafter to be handed over to them to carry on the business in partnership. If the said nephews carried on the business in partnership for 5 years to the satisfaction of the trustees, they were to become owners in equal shares as tenants-in-common; and if not, the wharf was to fall into residue. Some time before his death, the testator himself gave up the business and sold the stock-in-trade letting out the wharf to tenants. On his death, the nephews claimed the wharf on the ground that the condition precedent had become impossible of performance by the testator's own act, and the devise in their favour took effect. *Held,* on a construction of the will, the intention of the testator was that if for any reason, including his own act, the condition precedent was not complied with the wharf should go into the residue.

As regards personalty, the rule of law is that a condition precedent, which becomes impossible of performance by the act of the testator is thereby discharged; but this does not apply to devises of real estate.

GREGG *v.* RICHARDS, (1926) 1 Ch. 102.

Right of way—Sale of land—Privilege enjoyed by occupant prior to sale—Body of deed reciting right of way over specific portion—Statement in the habendum *that all subsisting rights are conveyed—Effect of—Rule of construction.*

The body of a document purporting to be a sale of house and lands expressly recited the grant of a right of way, which was therein described as coloured green on the plan attached to the deed. The plan showed that the right of way thus granted was four feet wide and formed only a part of a wide road. The *habendum* of the document contained a general clause that all rights of easement then enjoyed by the vendor passed to the vendee, and according to the evidence in the case, the vendor had a right of way over the whole width of the road. The question arose as to what passed to the vendee under the sale deed. *Held,* by Russel, J. the maxim *expressio unius est exclusio alterius* applied and as the body of the document recited expressly a right of way over a portion of the road only, the vendee could not claim anything more.

It is a principle of the law of conveyancing that "if the thing granted is not named in the premises, it will not pass though named in the *habendum.*"

BOOTH *v.* THOMAS, (1926) 1 Ch. 109.

Landlord and tenant—Natural stream confined by landlord in a culvert—Omission to repair culvert—Damage to tenant—Liability of landlord—Covenant for quiet enjoyment.

A landlord through whose lands a natural stream flowed inclosed it in a culvert. He let out a portion of his land to a tenant and gave him a covenant for quiet enjoyment. Owing to non-repair of the culvert, the stream broke through and caused damage to the tenant. *Held,* the landlord was liable to the tenant for breach of the covenant for quiet enjoyment, resulting from the omission to keep the culvert in a fit condition.

In re WHITROD: BURROWS *v.* BASE, (1926) 1 Ch. 118.

Will—Construction—Bequest of aliquot shares—Residue of shares—Lapse of certain aliquot shares—Intestacy.

A testator by his will made various bequests covering 9|10ths of his property to certain persons and "to the Non-Conformist ministers of *D,* the residue in equal shares."

Some of the legatees pre-deceased the testator and the question arose whether they lapsed into the residue and passed to the Non-Conformist ministers of *D.* *Held,* on a construction of the will, that the residue given to the latter was only 1/10th of the estate which had not been disposed off and not the residuary estate in the sense that they could benefit by the lapse of the legacies. The lapsed legacies would go to the heir and next of kin as on intestacy. Distinction between residuary estate and residue of the residuary estate pointed out.

In re MAY'S SETTLEMENT: PUBLIC TRUSTEE *v.* MEREDITH, (1926) 1 Ch. 135.

Powers of appointment—Widow—Exercise of power—Absolute appointment in favour of children—Advancement—Validity of.

A widow in exercise of her powers of settlement irrevocably appointed (subject to her own life-interest) that trustees should stand possessed of the settled property upon trust after her death for her two children in equal shares as tenants-in-common and should have power at any time at their discretion (but during her life-time only with her written consent) to spend a portion for the advancement, education or benefit of the children. *Held,* it did not amount to a delegation of the widow's special powers of appointment. The appointment was perfectly good, and the powers of advancement ancillary thereto were in no sense invalid as a so-called delegation of the widow's special powers.

WHITNEY *v.* COMMISSIONERS OF INLAND REVENUE, 1926 A. C. 37.

Super-tax—Alien resident abroad—Notice requiring return of income sent by registered post—Failure to comply with—Assessment in default—Legality of—Income Tax Act, 1918, *Ss.* 4, 7 *and Sch. D.*

A citizen of the United States of America resident there was the holder of some shares in a company registered and carrying on business in the United Kingdom, and from which he was deriving a large income. He was asked by the Revenue authorities to make a return of his income for purposes of super-tax, the notice having been sent by registered post to him as he had no agent in the United Kingdom to receive notice He failed to make the return and thereupon was assessed by

the Commissioners to the best of their knowledge. *Held,* by the majority of the House of Lords (Viscount Cave, L. C. and Lord Phillimore dissenting) the notice was validly served and the assessment was legal. (1924) 2 K. B. 602 affirmed.

Held also per curiam the word "individual" in S. 4 of the Income Tax Act, 1918, is wide enough to include a non-resident who has an income in respect of which he is chargeable with tax, either directly or by way of deduction.

BATCHELOR *v.* MURPHY, (1926) A. C. 63.

Lease—Covenant conferring option to purchase—Agreement to transfer residuary period—Surrender and agreement to execute new lease on same terms and conditions as before—If includes option to purchase—Failure to grant lease—Receipt of rent—Effect of.

A lessee of certain premises who had an option, to purchase the freehold at a certain price, wanted to transfer the unexpired period of his lease to another, and it was agreed between him and the lessor that the lease should be surrendered, the lessee released from all liability and a new lease for the residue of the term executed by the transferee "on the same terms and conditions in all respects as the old lease". As a matter of fact no new lease was executed, but the transferee entered into possession and paid rent regularly thereafter. He then claimed to exercise the option to purchase. *Held,* affirming the decision of the Court of Appeal in (1925) Ch. 220, the option to purchase had effectively passed to the transferee by implication.

NANKA-BRUCE *v.* COMMONWEALTH TRUST, LTD., (1926) A. C. 77.

Sale of goods—Property when passes—Weight, checking of—If a condition precedent—Purchaser buying in good faith from person in possession—Title of.

A sent bags of cocoa to *L* by rail, and the arrangement was that *L* should sell the same to merchants and transfer to them the railway receipts, the merchants paying the price after checking the weights. *L* sold the bags to a company, who purchased and took delivery in good faith, and credited *L* with the price against a debt due to them by *L*. *A* thereupon sued the company for damages for conversion. *Held,* checking the weights was not a condition precedent to the passing

of property and the company having purchased in good faith obtained a good title.

Quaere:—Whether the company having purchased from a person in possession of the goods with all the insignia of apparent title were not thereby protected in law?

LORD STRATHCONA STEAMSHIP COMPANY, LTD. *v.* DOMINION COAL CO., LTD., (1926) A. C. 108.

Shipping—Charterparty—Notice of—Purchaser of ship with notice—Rights of charterer—Specific performance—Injunction—Damages—Frustration of adventure—Doctrine of.

The doctrine of frustration of adventure can only be pleaded when the events and facts on which it is founded have destroyed the subject-matter of the contract or have by an interruption of performance so superseded it that it can be truly affirmed that no resumption is reasonably possible. The doctrine is not a hard and fast one which can be applied as a general principle in a definite measure to all cases alike. The facts and circumstances of each particular contract as well as the nature and duration of the interruption to performance must all be taken into account.

A person who purchases a ship with notice of a charter-party already entered into is in the position of a constructive trustee and can be restrained by injunction from employing the ship in any mode inconsistent with the charterparty. Specific performance however cannot be enforced nor is the purchaser liable in damages for failure to perform the charter-party. Case-law discussed.

VRASAPILLAI GABRIEL *v.* ELIATAMBY, (1926) A. C. 133.

Divorce—Adultery—Evidence of—Undelivered letters of wife to co-respondent—If evidence against him—Questions in cross-examination based on letters—If renders them evidence—Ceylon Evidence Ordinance, S. 9 (Indian Evidence Act, S. 9)—English Law if abrogated.

In a divorce case by a husband against his wife and a co-respondent with whom she was alleged to have committed adultery, certain letters addressed by the wife to the co-respondent but which were never delivered to him, having been intercepted, were put in evidence. The letters formed

good evidence against the wife and the counsel for the co-respondent had in cross-examination put questions based on the letters. *Held*, (1) the letters were not evidence against the co-respondent under S. 9 of the Ceylon Evidence Ordinance (which is the same as S. 9 of the Indian Evidence Act); and (2) the mere fact of questions having been put in cross-examination based on the letters did not make the letters evidence as against the co-respondent.

A verbal admission of adultery made by the wife, when drunk, in the presence of the co-respondent is not evidence against him for any purpose whatever.

The Ceylon Evidence Ordinance, which is merely the application to Ceylon of the Indian Evidence Act—has not swept away all the English Law relating to hearsay.

HOYSTEAD *v.* COMMISSIONER OF TAXATION, (1926) A. C. 155.

Res judicata—*Estoppel by judgment—Admission in prior suit—Effect of.*

The admission of a fact fundamental to the decision arrived at in a litigation cannot be withdrawn and a fresh litigation started with a view of obtaining another judgment upon a different assumption of facts. The same principle applies not only to an erroneous admission of a fundamental fact, but to an erroneous assumption as to the legal quality of that fact. Parties are not permitted to begin fresh litigations because of new views they may entertain of the law of the case, or new versions which they present as to what should be a proper apprehension by the Court of the legal result either of the construction of documents or the weight of certain circumstances. The same principle also applies to the case where a point, fundamental to the decision, taken or assumed by the plaintiff and traversable by the defendant, has not been traversed.

CAYZER, IRVINE & CO. *v.* BOARD OF TRADE, 95 L. J. (K. B.) 134.

Arbitration—Crown—If can rely on Statute of Limitation.

The Crown is entitled in arbitration proceedings, like any private party, to rely on the statutes of Limitation in defence, unless the submission provides otherwise.

BUCKLE *v.* HOLMES, 95 L J K B 158.

Trespass—Cat—Owner if liable—Domestic animals—Position of.

The owner of a cat is not liable for damage caused by the animal trespassing into a neighbour's house and killing his pigeons and chickens, unless *scienter* is proved. The law is the same with regard to cats and dogs, which are both domestic animals.

JOTTINGS AND CUTTINGS

Jessel's Start at the Bar.—Sir Charles, we may say at once, removes some misconceptions. Lord Bryce, in "Studies in Contemporary Biography," had attributed Jessel's success at the Bar to the backing he had received from Jewish solicitors. His fee books, which Sir Charles has, show "that no Jewish solicitor ever employed him till he had an extensive practice," and he adds that, in fact in the early days of his father's professional carreer no Jewish solicitor could have kept a Chancery barrister even in wig powder. And then there is the story of the dropping of the aitches, which we learn is purely apocryphal. "I never heard my father drop an aitch in my life, and I was much with him." Jessel's start at the Bar appears to have been due, not to Jewish solicitors, but to the lucky chance of his friend, George Thomas Jenkins, with whom briefs might have been plentiful, having no relish for Court work, and he recommended his clients, Messrs. Budd and Hayes, now Messrs. Budd, Brodie and Hart, of Bedford Row, to go to Jessel, which they did, and with all the uncertainties of the Bar, a man like Jessel requires no more than a start. Jenkins and Jessel were fellow pupils of Peter Bellinger Brodie, the great conveyancer of the early part of the nineteenth century. He drew important parts of the Reports of the Real Property Law Commissioners, and was the draftsman of the Fines and Recoveries Act. But this is a digression which we must not follow, though we observe that Robert Brodie, Brodie's third last surviving son, a distinguished scholar and for many years Head Master of the Whitgift School, Croydon, died quite recently. There was a notice of him in the *Times* of December, 17. Other pupils of Peter Bellinger Brodie were Sir George Gifford and Joshua Williams.

—*The Law Journal,* January 9, 1926, p. 26.

Jessel as an Equity Judge.—We have said that Sir Charles Jessel has all his father's fee books. They run from 1847, when he started with a total for the year of 52 guineas, to 1872, when it had reached 14,386. To July in 1873 it was 10,643. The great increase was in the last few years, and from 1871 to 1873 he had, also, his emoluments as Solicitor-General. And then, as Sir Charles points out, "there was only a three penny income-tax, no super-tax, and a sovereign which had considerably greater purchasing power than a pound to-day." At that time the work of the Law Officers was still compatible with private practice, and it was not for another twenty years that the growth of Government business made the continuance of this system impossible. Webster recognised it when he accepted the Attorney-Generalship on the new system in 1895. Sir Edward Clarke refused, and office was closed to him. Jessel became Master of the Rolls in 1873, and established a great reputation as an equity Judge. "He himself," says his son, "considered Lord Hardwicke to be the greatest equity Judge, with Lord Cairns second, and himself third." What made the reputation which he thus readily answered? Some of his decisions are famous. for instance, *Baker* v. *White*, (20 Eq. 166, 44 L. J., Ch. 651) on estates in copyholds; *Re Hallett* (13 Ch. D. 696, 49 L. J., Ch. 415) on the modern rules of equity; and *Henty* v. *Wrey* (21 Ch. D. 332) on fraud on a power of appointment. But no doubt the reputation grew irresistibly as the Bar watched the rapidity and sureness of his judicial work. It was rumoured that Chitty was making £1,000 a year in his Court. "Yes," said Jessel, "I make it for him." And as to his sureness, there is the story that he said, "I may be wrong, and often am, but I never doubt," which he corrected: "I can never have said 'often wrong' ". At any rate, as a first instance Judge he is said never to have reserved judgment, and in the Court of Appeal only twice or thrice at the request of his colleagues. *Henty* v. *Wrey* just mentioned, was one of these cases. And then, when he was only fifty-seven the end came. He returned from the doctor to say "My dear Charles, I have had my death sentence," and three days later he was dead. It is wonderful what interest his son has crowded into a short article.

—*The Law Journal, January* 9, 1926, p. 26.

Sartorial Etiquette in Court.—We note that the attention of the Bar Council has been called to the practice of King's

Counsel wearing their "mourning" gowns in Court. As is generally known, a King's Counsel wear a gown of silk, while those of the Junior Bar are made of "stuff." In addition to his silk gown, the King's Counsel has one made of tougher material known as the "mourning" gown, and originally intended to be worn only on occasions of mourning, but a fairly common practice has grown up of wearing this gown in the High Court and Court of Appeal, reserving the more fragile silk one for appearances before higher tribunals, such as the House of Lords and the Privy Council.

In passing the opinion upon this practice, the Bar Council were delightfully non-committal when they said that to this practice no objection is ever made.

—*The Law Journal*, January 23, 1926, p. 83.

Knighthoods and Privy Councillors.—By inadvertence last week we credited the late Right Honourable John Rawlinson, K. C., with a knighthood instead of the dignity of Privy Councillor, recently conferred upon him. It is significant, by the way, to notice the changing social values which have attached from time to time to these outward rewards of public service. In Tudor days Knighthood was an honour greatly prized and seldom conferred. Even a Lord Keeper of the Seal and a Lord Chief Justice, as a rule, until the 18th Century, received no higher reward: Sir Edward Coke and Sir Orlando Bridgman were but common or garden knights. Except for military victories, or in the case of courtesy, Elizabeth and the Stuarts hardly ever conferred a peerage; and, indeed, until the Reformation removed Abbots from the House of Lords, the spiritual peers had outnumbered the temporal. But in the 17th Century James I, created Baronets of Ireland and of Nova Scotia, *i. e.*, hereditary knights, titles which he bestowed on all who would purchase them, and the rank of knight never recovered the loss of prestige thus entailed. In the 19th Century innumerable new orders, such as those of St. Michael St. George, and the Star of India, were created: civil and military and municipal dignitaries received the rank almost as a matter of course; and gradually a knighthood lost its sometime repute as one of the highest dignities of chivalry. How, then, were famous men who could not accept an hereditary peerage to be rewarded? Thomas Henry Hurly solved the problem by refusing a baronetcy or a knighthood, but intimat-

ing that he would accept the rank of Privy Councillor, and thereafter this became a very common way of rewarding a distinguished man. We should say, also, that Mr. Rawlinson was not Chairman of the Bar Council, but was the Acting Chairman for some time during the illness of Mr. (now Sir Thomas) Hughes.

—*The Law Journal*, January 30, 1926, p. 89.

Lord Darling and the rank of Knight.—*A propos* of this question, the relative merits of a knighthood and membership of the Privy Council, a delightful story is told of Lord Darling which may not be known to all of our readers. Just after Mr. Justice Darling, as he then was, had been added to the list of Privy Councillors there appeared before him in Court a member of the Junior Bar, who, as a reward for distinguished war service, had recently received knighthood. In momentary forgetfulness Mr. Justice Darling kept addressing him as Mr. R— until his associate reminded him of his error by a whisper. Then the Judge apologised with all his wonted grace and courtesy, but could not resist the temptation to add in a sly tone, "You see, Sir A—, in my young days it was not the custom to make junior barristers knights". "Quite so, my Lord," was the smart reply, "nor was it then the custom, I believe, to make puisne Judges Privy Councillors".

—*The Law Journal*, January 30, 1926, p. 90.

Secret Conveyancing.—Attention has been called recently to the publicity of the Land Charges Register, and the opinion has been expressed that secret conveyancing will no longer be possible unless the land is registered under the Land Registration Act, 1925. But is the Land Registry as secret as its advocates claim? S. 129 of the Act provides as follows:—

> The Commissioners of Inland Revenue and other Government Departments, and local authorities, may furnish to the registrar on his request such particulars and information in regard to land and charges, and the registrar may in like manner furnish to the Commissioners of Inland Revenue, other Government Departments, and local authorities, on their request, such particulars and information as they are respectively by law entitled to require owners of property to furnish to them direct.

It would seem that the network of officialdom is ever spreading, and if registration of title means further inquisitorial demands from the Commissioners of Inland Revenue and other Government Departments, the benefits (if any) of land

registration will be very limited. It is not pleasant to find that the Inland Revenue Officials are now entitled to pry into the titles of property with the object probably to tighten the screw on the already over-burdened taxpayer. By all means the officials should have ample powers to call for the production of documents in order to check income-tax returns, etc., but such powers should not include a right to inspect documents without the owner's knowledge.

—*The Law Journal,* January 30, 1926, p. 90.

Lord Birkenhead's "English Judges".—We noticed from time to time as they appeared last year in the *Empire Review* Lord Birkenhead's sketches of English Judges. The twelve finished with Earl Cairns, and the sketch of Cairns finished with the imagined dinner-party at which Lord Birkenhead would have associated with Cairns as his guests Chief Justice Cockburn, Lord Selborne, Sir Samuel Evans, Lord Westbury, and Jessel, M. R. "In such company we might, I think, have had what even Dr. Johnson would have considered good talk." Of these last names only Westbury is included in the series, and for the two additional Judges who make up the "Fourteen English Judges" in the volume containing the *Empire Review* sketches which has just been published (Cassell & Co., Ltd.), the choice has fallen on Sir James Fitzjames Stephen and the Earl of Halsbury. It will be remembered that a very interesting account and appreciation of Sir Samuel Evans and his Prize Court work has been given by Lord Birkenhead in his "Points of View". Chief Justice Cockburn remains without fitting record, but Lord Birkenhead gives a half promise to make good this omission in a companion volume to be known as "More English Judges"; when that comes he will, in the preface, "attempt to make plain who, and in what order, are in my judgment the ten greatest Judges who have interpreted Law in the Courts of this country." To that volume every one will look forward with interest. The present volume we hope to notice more fully next week. Fitzjames Stephen, we read, commenced his childhood with the declaration: "I don't want to be as good and wise as Tom Macaulay," but, wise or not, he came to be the great exponent of the Criminal Law. And Halsbury, though not a legal writer, read, says Lord Birkenhead, every page of the great work which bears his name as it was passing through the press, and it gained much from his criticism and advice. Readers

of the *Empire Review* wondered how Lord Birkenhead managed to collect the judgments of the subjects of his sketches, judgments on which his appreciations of them were largely founded. We now learn that he has had the assistance of Mr. Roland Burrows, "one of the most learned members of the English Bar".

—*The Law Journal,* January 30, 1926, p. 90.

The Maharajah of Indore's Brief.—The rumour that Sir John Simon has been briefed to visit India on behalf of a Maharajah accused of conspiracy to murder a dancing girl will probably remind practitioners with good legal memories of the only two other cases on record in which an eminent English advocate has been thus retained. Half a century ago when the then Gaekwar of Baroda was accused of attempting to murder his Resident, Serjeant Ballantine received a fee of ten thousand guineas to go out and defend him, and the veteran of the Old Bailey devotes in his "Experiences" a chapter to this episode in his career. By the way, he received the fee with the brief before starting, and gambled it all away on his journey through France, so that his route was delayed until he had managed to borrow the sum required for his fare. The fee was unexampled at that date, and long remained without a precedent;but five years later Mr. Barrington Ward, K. C., received the same sum on a retainer to defend an Oriental princeling in Bagdad, also accused of murder; his client was, in fact, acquitted. Sir John Simon's addition as a third to this small group of five-figure fee receivers is, indeed, an interesting episode in the history of the English Bar.

—*The Law Journal,* January 30, 1926, p. 90.

Serjeant Ballantine's Case.—The case of the Gaekwar whom Ballantine defended, by the way, forms an instructive chapter in the constitutional history of India. The Gaekwar of Baroda is one of the four great Mahratta Sovereigns, rulers of the leading native States, who bear peculiar designations resembling our feudal "Dymoke of Scrivelsby": the others are the "Peshwa," "Holkar," and "Sindhia" respectively. These are the leading native States in Mahratta law, but there are many others, of which Indore is one. Formerly these States were Protectorates of the Presidency of Bombay, but in 1923 they were transferred to the direct tutelage of the Viceroy in

Council. A Resident resides at each State and advises the Prince both as to home and foreign affairs; the penalty for refusal to follow this advice is usually deposition. Of course, as a ruling prince, the monarch is not subject to criminal process either for acts within or without his own State: but in practice the Government of India has sometimes placed native princes on trial under special ordinances enacted *ad hoc* prior to their deposition and banishment or imprisoment. The Gaekwar case is one of those special trials; a Court consisting of three British officials and three native princes was empanelled to try him; the Court disagreed, since all the British officials voted "Guilty," and all the Indians voted "Not Proven." In the end the Viceroy's Government accepted the British view and deposed the Gaekwar, an act which was denounced as 'arbitrary' by the Indian Princes of the day, and became one of the pet grievances of Indian nationalists.

—*The Law Journal,* January 30, 1926, p. 90.

A Prose Anthologist and the Law Reports.—The result of Sir Arthur Quiller-Couch's selection of English Prose—"The Oxford Book of English Prose"—is, of course, a literary "*premier grand cru.*" The anthologist's task is, however, a thankless—the prose anthologist's probably an impossible—one; and the new volume will not satisfy all palates. Lawyers, for instance, will miss the—shall we say—slightly acrid flavour which would have resulted from the inclusion of Blackstone; and we cannot but think that the "Commentaries" have other than sentimental claims to be represented in an anthology covering the whole province of English prose. That, however, by the way. Sir Arthur Quiller-Couch's selection of extracts from the judgments of Lord Macnaghten and Bowen, L. J., as indicative of the high water level in judicial pronouncements cannot be challenged. Equally unchallengeable is the inclusion of the famous "Ghost of the deceased Roman Empire sitting Crowned upon the grave thereof" passage from Hobbes' "Leviathan." Maitland and Maine, too, are drawn upon; and a quite soundly expressed passage from the judgment of Lord Sumner in *Bowman v. Secular Society, Ltd.* [(1917) A. C. at p. 466] is given. The thought of the Law Reports as a source for the prose anthologist will, perhaps, strike many lawyers as a novel one. And too often, judgments, viewed from a literary standpoint, are dull and uninspiring enough. Not always, though; and ourselves have

come across in them such phrases—worthy of Sir Thomas Browne himself—as "Under the dominion of old prejudices" and "The wages of mortality."

—*The Law Journal,* January 30, 1926, p. 91.

The United States and the World Court.—Ever since President Wilson, as his great contribution to International Order, a procured the insertion in the forefront of the Peace Treaties of the Covenant of the League of Nations, the League has been steadily growing in influence. Inseparable from the League is the Permanent Court of International Justice. Provided for by Article XIV of the Covenant, the Court had still to be brought into existence. This was done by the Statute of the Court which was adopted by the Assembly of the League in December, 1920. The Judges were appointed in 1921, and the Court was formally opened at The Hague in February, 1922. Since then it has given a series of decisions, some of them of great importance. But while America stood aside, the Court lacked the full authority required for its complete success. This defect was cured last week by the decision of the Senate, by 76 votes to 17, for adherence to the Court. That the United States still stand outside the League, while they adhere to the Permanent Court, is a singular position, for League and Court alike are largely the result of the movement begun by Ex-President and now Chief Justice Taft. But it may be that practically the adherence to the Court is more important than joining the League. At any rate this step has been taken, and it is a long step towards the establishment of International Justice. The impartiality of the Bench of the Court has already been strikingly shown.

—*The Law Journal,* February 6, 1926, p. 111.

Westminster and Whitehall.—Parliament is sitting again, and the growth of the Civil Service and the cost of government are likely to receive no small attention. We are glad, therefore, to draw attention to the article in the current *Edinburgh Review* by Sir J. A. R. Marriott, M. P., on "Whitehall and Westminster." Of course a Civil Service is an essential element in the State, though the Service as we know it is of quite recent establishment. Sir James Marriott dates it from the issue of a report by Sir Stafford Northcote and Sir Charles Trevelyan in 1853. In that they said:—

"As matters now stand, the Government of the country could not be carried on without the aid of an efficient body of permanent officers, occupying a position duly subordinate to that of the ministers who are directly responsible to the Crown and to Parliament, yet possessing sufficient independence, character, ability and experience to be able to advise, assist, and to some extent influence those who from time to time are set over them."

No doubt this fairly represents the relations which should exist between the transient phantom of the Minister and the higher permanent officials; but there is a tendency for the permanent staff to encroach on the Ministerial functions, and all the time, too, there is the steady growth of the Civil Service in numbers and cost. Largely this is the inevitable result of the extension of the activities of the state. New Ministries have been formed, and each requires its own staff. But the present-day bureaucracy not only tends to increase in its own administrative sphere. It also, as Sir James Marriott reminds us, encroaches on the Legislature by the system of delegated legislation, and, we may add, it has in recent times encroached on the Judicature by the assumption of judicial power. This encroachment and this assumption are, indeed, under Parliamentary authority, but the Departments themselves have a large hand in framing the measures to which this result is due. The Judges, Sir James Marriott concludes, "are powerless if the Legislature betrays the pass. It is, then, to Westminster that we must primarily look to arrest the encroachments and to restrain the ambitions of Whitehall."

—*The Law Journal*, February 6, 1926, p. 112.

The Increase of Penalties Bill.—We are sorry that Mr. Greaves Lord, K. C., and Mr. James Anthony Hawke, K. C., should have set Parliament an unfortunate example of introducing, as proposer and seconder respectively, the Increase of Penalties Bill, which received its second reading on the 19th instant. The object of the Bill, namely, to allow of increased sentences upon persons convicted of more than one offence at the same time—if such persons have a record of previous convictions against them—we are stating the practical effect of the Bill and not giving an exact description of its provisions—may or may not be a desirable measure. But, if it is desirable, it should be introduced on mature consideration, after careful deliberation by the responsible legal advisers of the Crown into a House of Commons which can

consider it with a reasonable degree of detachment. To introduce such a measure hastily into a House whose members have been recently stirred by reading of a notorious case in the Courts, and who, therefore, cannot consider such a measure with the judicial spirit necessary if legislation is to be the fruit of deliberation and wisdom rather than of panic, is incitement to a Parliament to usurp the functions of the mob. and to abandon those of the *Curia Parliamenti*, which is its true function. It is unfortunate that eminent and highly esteemed lawyers, even if encouraged by some remarks of the Lord Chief Justice, should have led the way, instead of criticising such a surrender to the principles of mob rule and panic legislation.

—*The Law Journal*, February 27, 1926, p. 188.

BOOK REVIEWS.

COMPANY LAW by K. J. Rustomji, 1926 published by the Empire Law Publishing Society, Lahore.

Mr. Rustomji needs no introduction to the legal profession in this country. His latest work on the Indian Company Law is an exhaustive and critical commentary on the Indian Companies Act, 1913, together with the rules and forms thereunder and giving reference to the English and Indian authorities on the subject. The Company law is not very well understood generally in this country and this contribution from the pen of this well known legal writer will tend to a clear understanding of the law by persons having to discharge the duties of directors, auditors, secretaries and liquidators of joint stock companies, not to speak of lawyers and Judges. The author being one who is known not to hesitate to give expression to his own views on legal topics apart from the decisions or the opinions of other text writers, the treatment by him of the subject will not be found to be a mere collection of cases in their appropriate places. It must however be mentioned that the cases have been brought down to the end of 1925. We therefore share with Mr. Justice Dalip Singh who has written the foreword to this work, the hope that the book will find its place in the libraries of legal practitioners and we would add of business men and Judges.

POLICE DIARIES AND STATEMENTS by K. A. Khan, Hissar, Price Rs. 3-8-0.

We have great pleasure to acknowledge the receipt of a copy of Police Diaries and Statements with all the connected provisions of the law with reference to the rulings, departmental rules, notes and commentaries hearing on the same by Khan Saheb Mohammed Kalandar Ali Khan, Public Prosecutor, Hissar. The value and worth of statements to Police Officers, the right of the accused to get copies of the statements, the purpose for which the statements can be used and the rules of practice regarding the Police Diaries and Statements are matters of such interest in the Criminal Courts that a discussion of them by the author in this work is bound to be of great assistance especially as it comes from one who has had every day practical experience of the administration of the Criminal Law. In the course of this book the author has also dealt with admissions, confessions and discoveries emanating from accused persons which are in some measure connected with the other subjects discussed. The enumeration of the points dealt with is enough to show to the profession the worth and the usefulness of this publication.

INTRODUCTION TO ROMAN-DUTCH LAW, by R. W. Lee, D. C. L., M. A., Oxford University Press, Madras.

Roman-Dutch Law is the name given to the system of law that obtained in Holland during the existence of the Republic of the United Netherlands. The principles of that law were carried into the Dutch Colonies. When some of these, namely, the Cape of Good Hope, Ceylon and part of Guiana went into British hands, according to the well-established British practice, the old law continued to be applied. In Holland and its Colonies at present that law has been superseded by modern codes. Roman-Dutch Law is derived from two sources—Teutonic custom and Roman Law. "In order to answer the question what is the law in such and such a case," says one of the leading authorities in this system of law, "we must first enquire whether any general law of the land or local ordinance having the force of law or any well-established custom can be found affecting it. The Roman Law, as a model of wisdom and equity, is, in default of such a law, accepted by us through custom in order to supply this want." This system has had

varied history in different Colonies. In British Guiana, after languishing some time, it has been replaced by the English Common Law. In Ceylon it still maintains a foothold though Statute Law based on the English Common and Statute Law has largely replaced it. But in South Africa it looks as if it will have a vigorous future. But even there the English Law is making considerable inroads. In the Cape of Good Hope, for instance, on questions relating to shipping, fire, life and marine insurance and stoppage *in transitu* and Bill of Lading, the English Law governs and much of English Law has trickled in by tacit acceptance. The sources of Roman-Dutch Law as administered at present are (1) treatises, (2) Statute Law, (3) decisions of Courts, (4) opinions of jurists, and (5) custom. Under the first heading come the old text-writers of Holland who hold a position similar to the decisions of Courts or the great "books of authority" in England. Under the third come the published opinions of Grotius and other eminent lawyers. Under custom comes, as already pointed out, Roman Law. Without going into great technical details which embarrass a person unacquainted with the system, the writer gives a sufficiently full and clear account of the principles of the system for all the purposes of comparative jurisprudence from which point of view alone it is of interest to us in India.

A TREATISE ON THE LAW OF EASEMENTS AND LICENSES IN BRITISH INDIA, by Brindaban Katiar, High Court Vakil, Allahabad. Butterworth & Co., Ltd. Rs. 12.

This purports to be an analytical, critical and expository commentary on the Indian Easements Act. Some of its features are likely to attract the student, while others, the practising lawyer. With the combination, it is sought to attract both. The catching headlines are a good feature and the treatment is full, and, so far as we have been able to test, accurate. The get-up is excellent and we have no doubt that the book will supply a real need.